LAB 6 – Superposition & Thevenin's Theorem

Introduction: For the first part of this lab, we used superposition to be able to get our values. This means we turned one and left one on, solved for our values, then turned off the other one and left the other one on, solved for our values, and then added those values together to get a total. For the second part of this lab, we utilized Thevenin's theorem which states that any two-port linear network may be replaced by a single voltage source with an appropriate internal resistance.

Pre-Lab:

1. Use super position principles to find i.

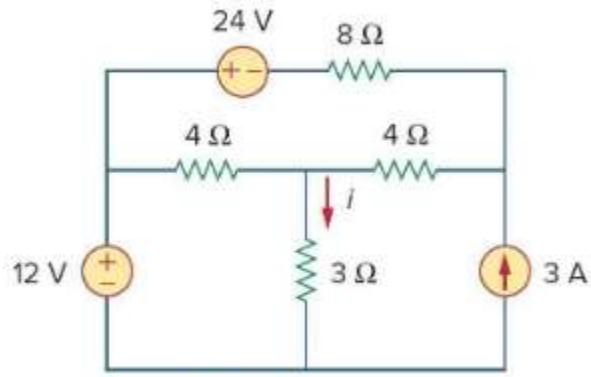

Figure A

I=4A

2. Find the Thevenin equivalent circuit of the circuit Fig B to the left of the terminal a-b. Then find the current through RL=6Ω, RL=16Ω and RL=36Ω

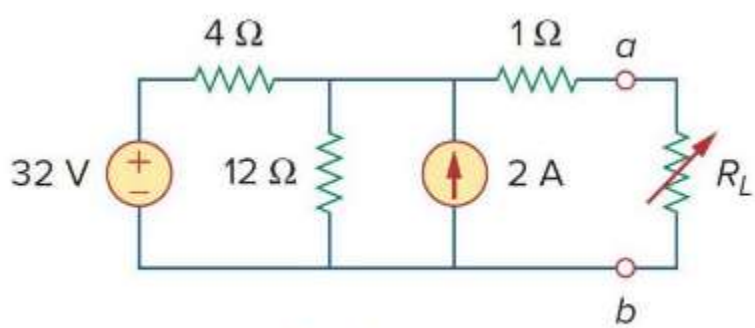

Figure B

Vth=30.3V, Rth=4Ω, I = 12.12mA when RL=6Ω, I = 6.06 when RL=16Ω, I = 3.03 when RL=36Ω

Part 1- Superposition

Circuit 1

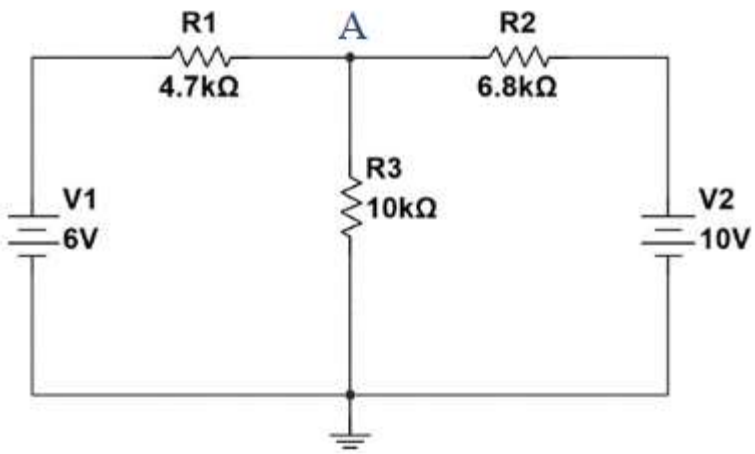

Figure 1

Source	Va Theory (V)	Va experimental (V)	Deviation
V1 Only	2.7749	2.7638	0.40001441
V2 Only	3.1981	3.2015	-0.1063131
V1 and V2	5.973	5.9653	0.12891344

Explanation: For the first circuit we had two power supplies. We used superposition to get our theoretical values. Then when measuring we first replaced V2 with a short then measured voltage at node a. After that we replaced V1 with a short and left V2, then measured voltage at node A.

Circuit 2

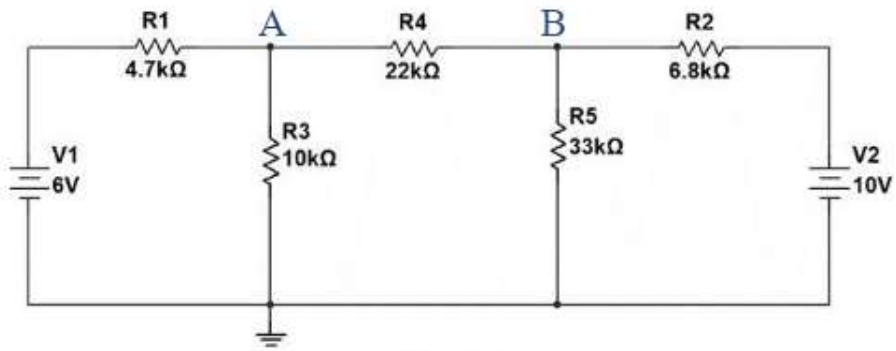

Figure 2

Source	IR4 Theory (mA)	IR4 experimental (mA)	Deviation
V1 Only	0.1323	0.1324	-0.0755858
V2 Only	-0.2688	-0.2678	0.37202381
V1 and V2	-0.1365	-0.1354	0.80586081

Source	PR4 (mW)
V1 Only	0.3856
V2 Only	1.5851
V1 + V2	1.9707
V1 and V2	0.4069

Explanation: For this circuit we treated each source independently as well. We calculated the current through R4 using v1 then v2. We added these to get v1 and v2. Then we shorted v2 and measured the current through R4, then did the same to v1. Then we had both sources connected and measured the current through R4. With all our theory and measured values, we were able to compare. We then calculated the power.

Part 2 – Thevenin's Theorem

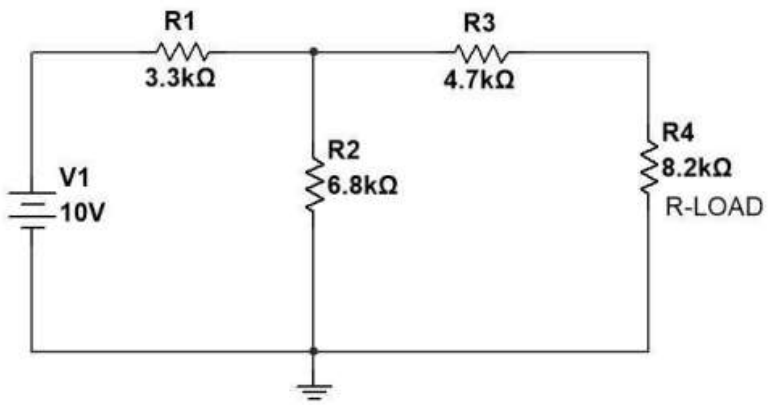

Figure 3

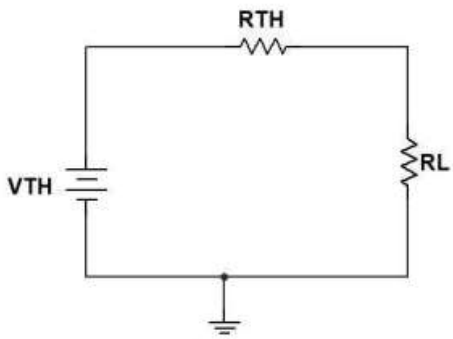

Figure 4

Original Circuit (Figure 3)

R4 Load	Vload Theory	Vload Experimental	Deviation
8.2kΩ	3.3886 V	3.3722 V	0.48%
2.2kΩ	1.4908 V	1.4953 V	-0.30%

Thevenized Circuit (Figure 4)

	Theory	Experimental
Vth	6.3551 V	6.3425 V
Rth	7.1785kΩ	7.1160kΩ
Rth Method 2	x	7.4867kΩ

R4 Load	Vload Theory	Vload Experimental	Deviation
8.2kΩ	3.3891 V	3.3691 V	0.59%
2.2kΩ	1.4911 V	1.4861 V	0.34%

Explanation: First we calculated our theoretical Vload values by using series and parallel rules and swapping Rload for 8.2k and 2.2k. Then when we measured Vload with the two different resistors and did the deviation. Our deviation is quite small so we were close to the values we should have been at. We calculated our Vth theory and then measured Vth and saw they were similar. We did the same for

Rth and saw a closer similarity with the first method rather than the second. With these values we calculated the Vload with 8.2k and 2.2k resistors. We then measured them and calculated the deviation which ended up being very minimal which means our values differ due to small uncertainties like resistor tolerance.

Conclusion: In conclusion we were able to apply superposition in a real circuit to be able to get voltage values. It was interesting to see that this method really does work as our theoretical and measured values were similar. We were also able to use and apply Thevenin's theorem into our second part of the lab. Thevenin's theorem is super useful because it allowed us to simplify our circuit. Overall, this lab went extremely well, and our deviations were minimal.